Product Sheet

Description

SB

Designer: Stefano Gallizioli

Typology: Chair with arm
Year: 2003

Description:

From the beginning, attention in the choice of material, the evaluation of the best techniques such as 45 ° welding and a characteristic design have been the concern for the creation of our products. The collection includes chairs with and without armrests, armchair, sofa, rocking armchair, stools and hammock characterized by the satin stainless steel structure; seat and back in nylon reinforced PVC cord, acrylic cord that warm and color your exterior. The combination of these elements has led to the creation of the Sg1 collection and a strong impression for the choice in the creation of the following our collections.

Technical information

Frame: Steel inox satinized

Interlacing: PVC cord with nylon core (woven codeA3)/Acrylic cord 3 (woven codeB3) or 6 mm with Teflon (woven codeB6)

Seat slats: Stiff polyurethane slats

Drawings

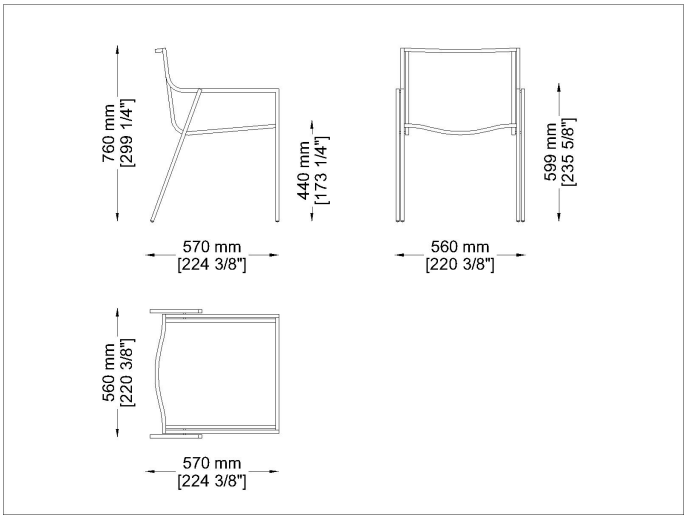

SB01-SB02

Product Sheet

Materials

Metal structure

Satinized inox steel

Satinized/Satinato
steel satinized

PVC woven backrest and seat

PVC cord 3mm

P1
Bianco-White

P3
Tortora-Taupe

P4
Nero-Black

P5
Verde Mela-Green
Apple

P6
Arancione-Orange

Acrylic woven backrest and seat

Acrylic cord 3/6mm

CR9
Creta Clay

CR8601
Malva-Mauve

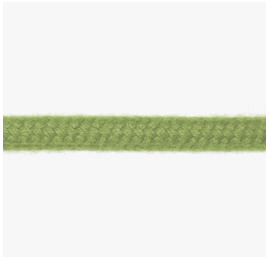

CR7244
Amande

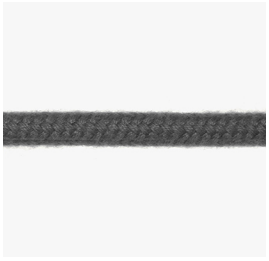

CR107
Antracite-Charcoal

CR15
Bianco-White

Product Sheet

CR5040
Ocra-Ocher

CR926
Tortora-Taupe

Product Sheet

Images

Product Sheet

Suggested Products

Zeta

Tasia

Shot

Nest

SG1

TQ-
To b

Jubeae

Shot

Jubeae