Product Sheet

## Description

Nest

Designer: Stefano Gallizioli

Typology: Table
Year: 2007

Description:

A table becomes reality through design, image definition and industrial processing. An object for various moments of the day, adding a personal and highly pleasing note, totally free of restrictions, combining practicality with unerringly sophisticated elegance. The satinized stainless steel structure can be proposed with a  laminate top, different materials that can fulfill your ideal solution for a dinner or lunch with friends.

Technical information

Frame: Steel inox satinized or powder coated frame

Top: Powder coated aluminum

## Drawings

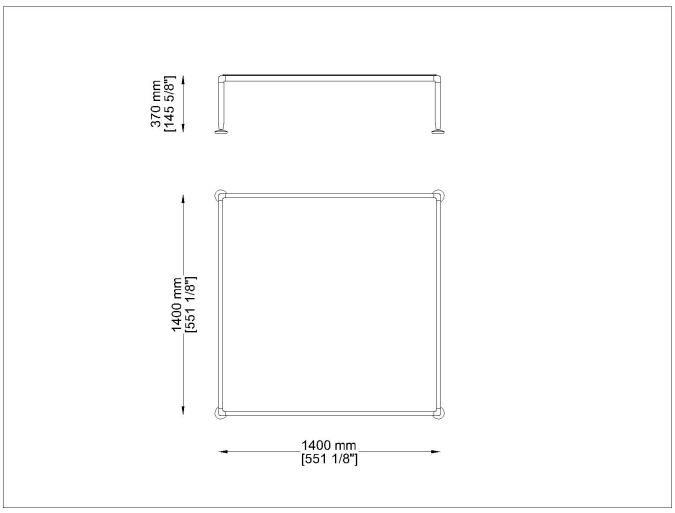


N TQ140H37

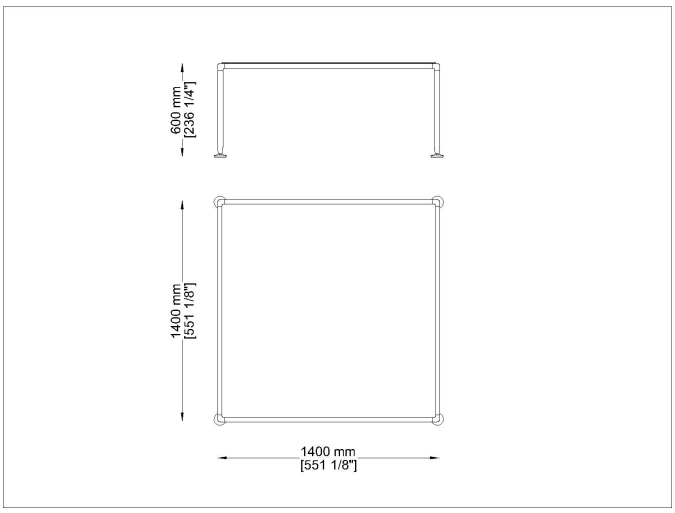


N TQ140H60

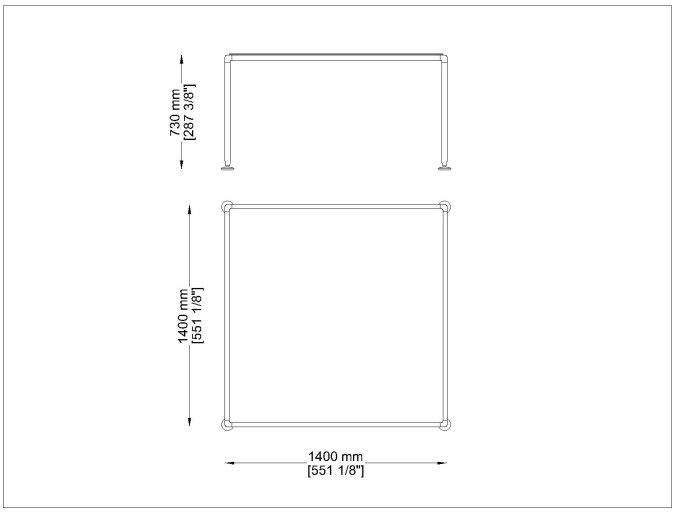


N TQ140H73

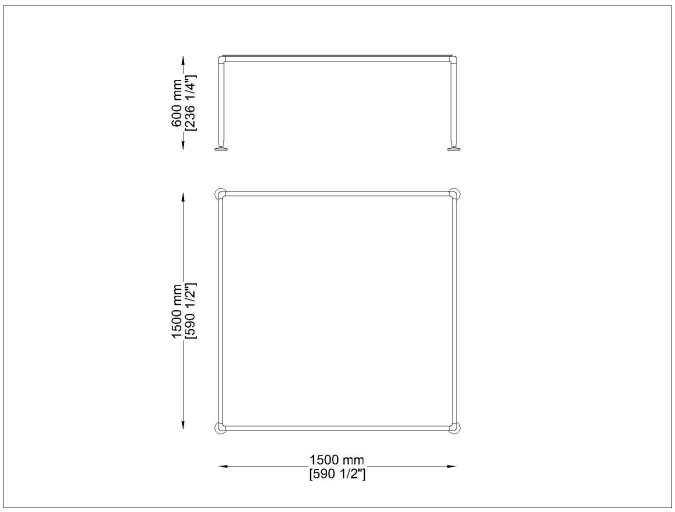


N TQ150H60

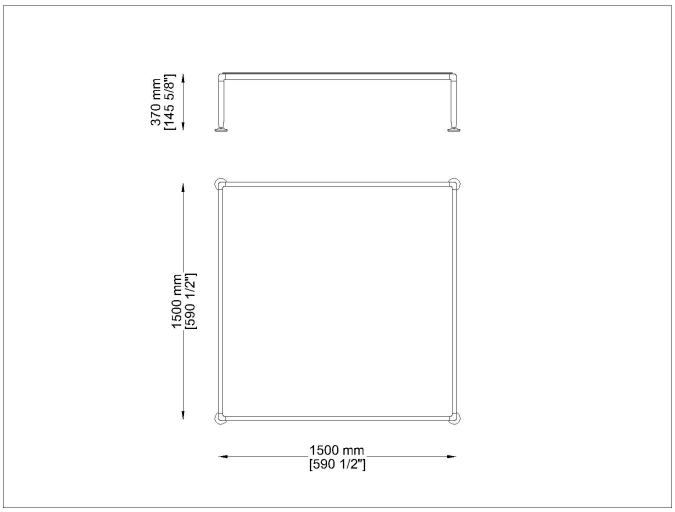


N TQ150H37

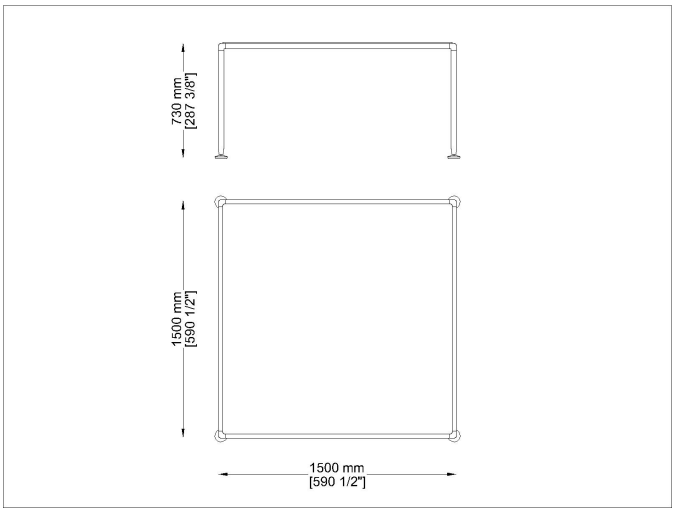


N TQ150H73

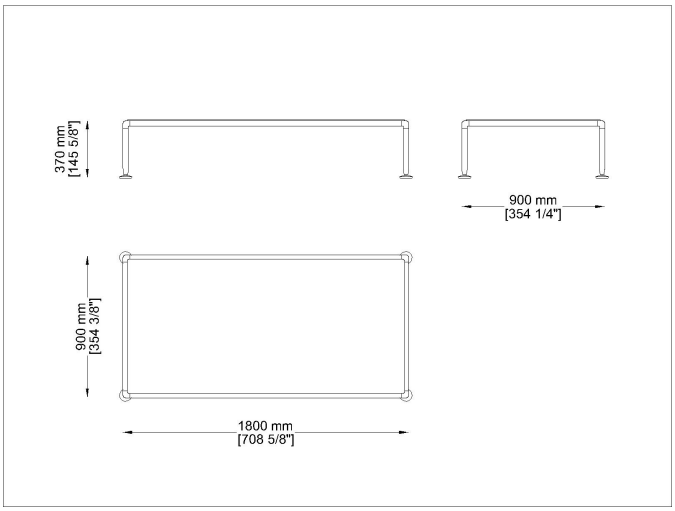


N TR180H37

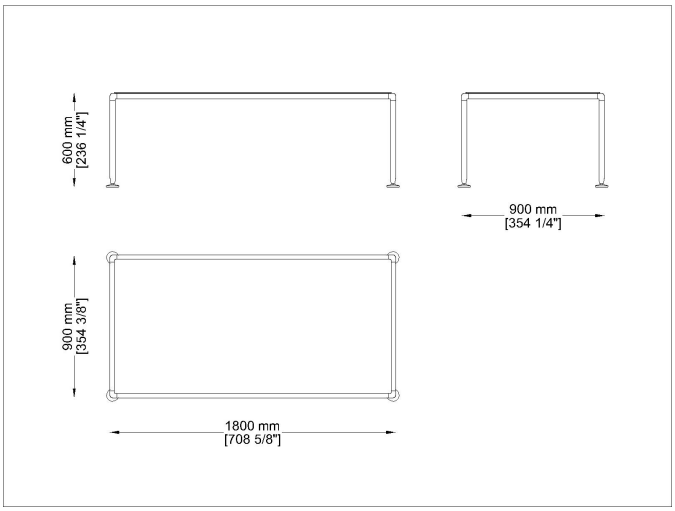


N TR180H60

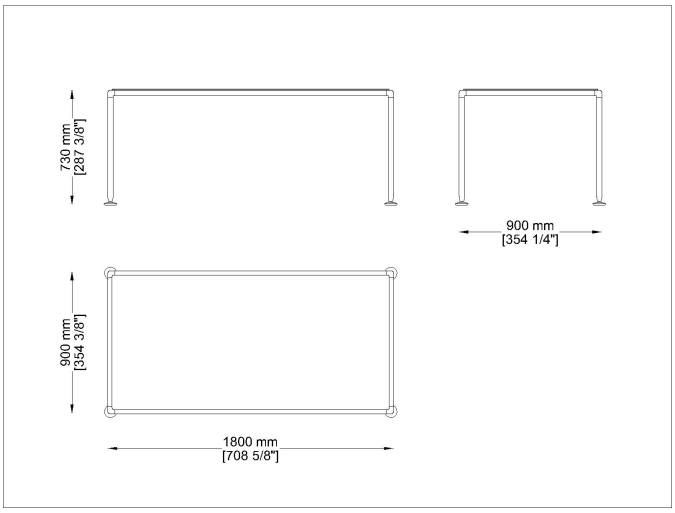


N TR180H73

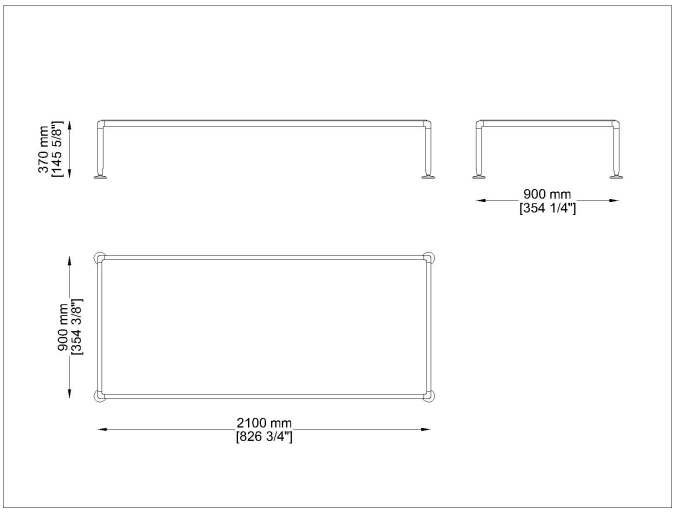


N TR210H37

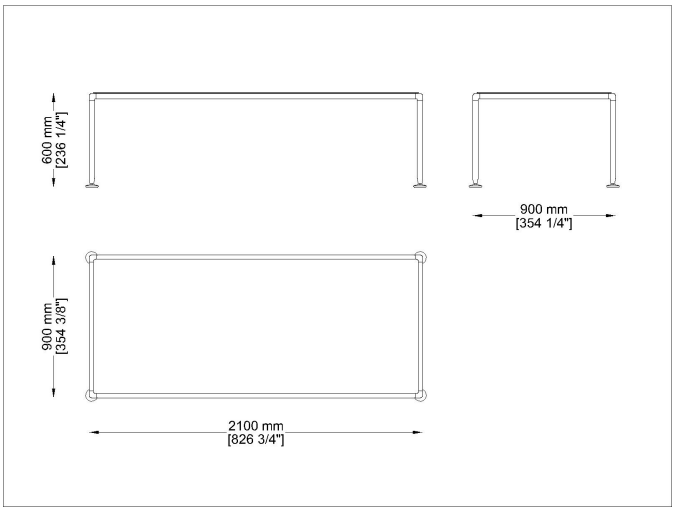


N TR210H60

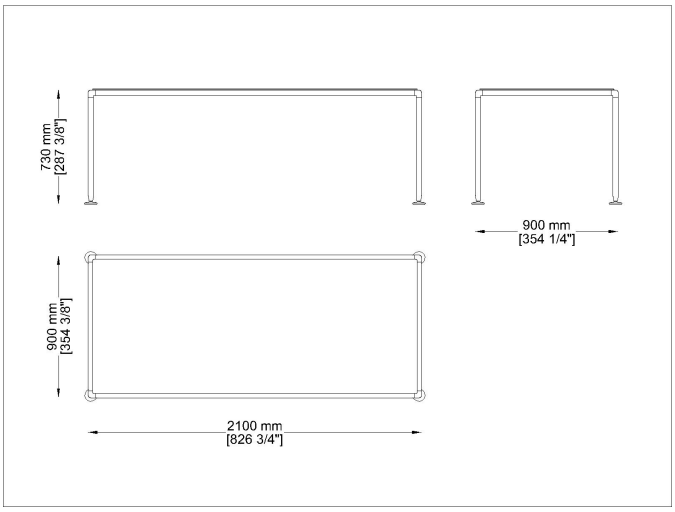


N TR210H73

## Materials

### Metal structure

Satinized inox steel

Satinized/Satinato
steel satinized

### Metal structure

Powder coated inox steel

RAL 5024
Azzuro-Light Blue

RAL 6021
Verde-Green

RAL 9010
Bianco-White

RAL PD5843
Tortora-Taupe

RAL1019
Lino-Linen

### Table top

Powder coated top

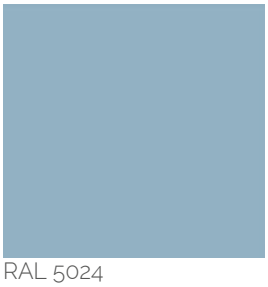

RAL 5024
Azzuro-Light Blue

RAL 6021
Verde-Green

RAL 9010
Bianco-White

RAL PD5843
Tortora-Taupe

RAL1019
Lino-Linen

## Suggested Products

Private:
Fellini

SB

S

Nest

Zeta

Livis

Jubeae
ST

Jubeae
S

Jubeae
SB